THIS DOCUMENT IS THE PROPERTY OF FABCO INDUSTRIES AND IS CONVEYED WITH THE EXPRESS CONDITION THAT IT AND THE INFORMATION CONTAINED IN IT ARE NOT TO BE USED, DISCLOSED, OR REPRODUCED IN WHOLE OR IN PART, FOR ANY PURPOSE WITHOUT THE EXPRESS WRITTEN CONSENT OF FABCO INDUSTRIES, AND THAT NO RIGHT IS GRANTED TO DISCLOSE OR SO USE ANY INFORMATION CONTAINED IN SAID DOCUMENT.

9786-2S-000 | 1 | D | 1

REVISIONS

REV	DESCRIPTION	DATE	APPROVED
D	ECN9786-2S-000C	12/5/06	

NOTES:

1. WEIGHT (EMPTY): 15 LB MAX

2. MATERIAL:
   A) SHROUD: HDPE
   B) SUPPORT HUB: CRS, POWDER COATED
   C) STORMSACK: WOVEN POLYPROPYLENE GEOTEXTILE
   D) HARDWARE: ALUMINUM POP-RIVETS, CRES LOCKING-CLIPS

3. PERFORMANCE CHARACTERISTICS (TYP):
   A) DEBRIS CAPACITY: .34 CU-FT
   B) FILTERED FLOW RATE: .93 CFS (418.5 GPM)
   C) BYPASS FLOW RATE: 1.5 CFS (685 GPM)

4. DESIGNED TO FIT NYLOPLAST CASTING, P/N: 1599CGS (OR EQUAL) WITH ASSOCIATED TRANSITION PLATE.

5. TYPICAL INSTALLATION: RAISE STORM GRATE, PUSH CATCH-IT SHROUD DOWN ON FRAME SUPPORT LEDGE UNTIL LOCKING CLIPS CLICK IN PLACE, LOWER STORM GRATE.

6. USE ONLY WITH FABCO REPLACEABLE STORMSACK, P/N: 9786-2S-200

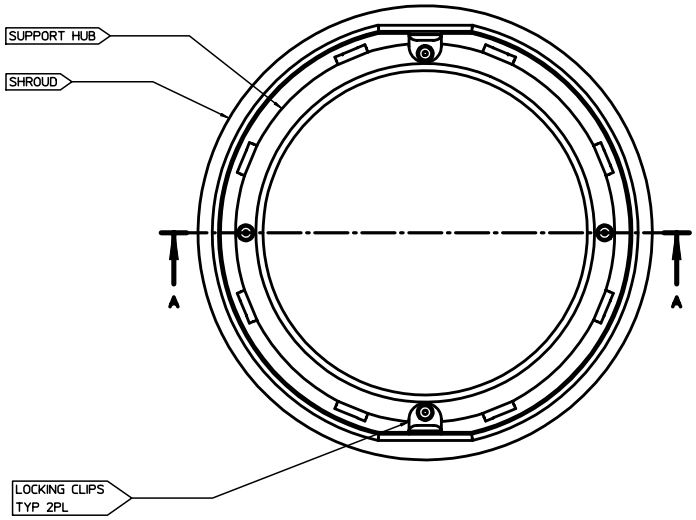

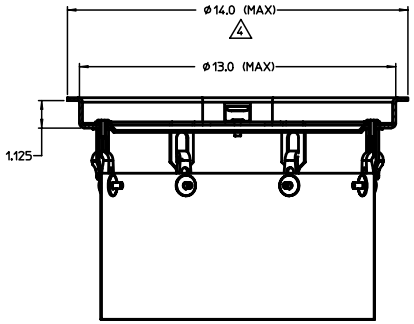

SECTION A-A

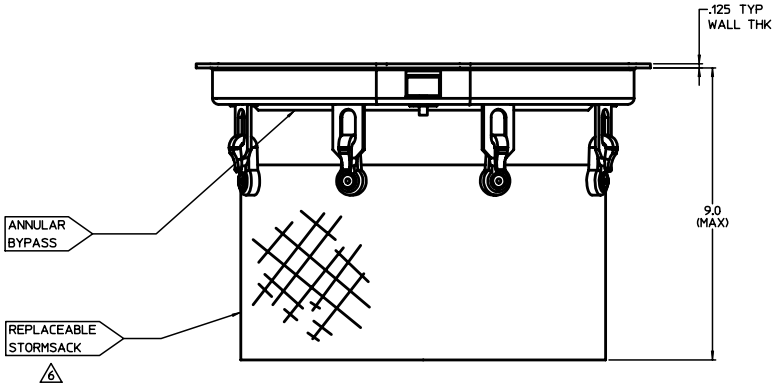

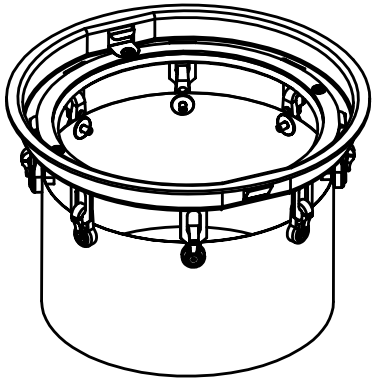

NO	QTY	PART NUMBER	DESCRIPTION	REMARKS

BILL OF MATERIALS

UNLESS OTHERWISE SPECIFIED REMOVE ALL BURRS BREAK SHARP EDGES .002 - .020 FILLETS .020 MAX DIMENSIONS ARE IN INCHES AND DEFINED AFTER ALL APPLIED OR PLATED FINISHES

TOLERANCES
DEC .00 ± .02
DEC .000 ± .005
FRACT ± 1/16
ANGLE ± 2°
Ra FINISH 125√

DO NOT SCALE THIS DRAWING

APPROVALS		DATE
DRN	N.NEUWIRTH	10/04/06
CHKR		
ENGR	J. PETERS	10/04/06
APVD		

MATERIAL: SEE NOTES

MODEL LINK: 9786-2S_ASSY3

FABCO INDUSTRIES, INC.
170 WILBUR PLACE
SUITE 12
BOHEMIA NY 11716

TITLE: CATCH-IT, 15-IN [SHORT]

SIZE	CAGE CODE	DWG NO	REV
D	1P8A4	9786-2S-000	D

SCALE 1/2 | WT | SHEET 1 OF 1